THE STORY OF . . .

GARNETT
CHURCH FURNITURE
traditional . . . contemporary

Garnett offers a complete line of church furnishings built to rigid standards of quality and workmanship. In designing and manufacturing church furniture since 1879, Garnett has acquired unique experience in helping to solve the special problems facing church builders.

When you specify GARNETT you can be sure you have selected the finest church furniture, whatever your price range.

custom-crafted
for the most discriminating

GARNETT
CHURCH FURNITURE AND MANUFACTURING CO.
GARNETT • KANSAS

AIA No. 35-A-41

GARNETT PEWS

styling unlimited • quality unsurpassed

Church of the Gesu, University Heights, Ohio, John E. Miller, Architect, Cleveland, Ohio

Church seating involves more than comfort and convenience for the congregation. The style and quality of the pews contribute to the beauty of the structure as a whole, with the converging rows also helping to bring the focus upon the worship center.

Technically, a pew is made up of two ends, a pew body, its center supports, and in certain cases, divisions. The styling and the quality of construction blend to make the finest church furniture. At Garnett, *you* determine the styling of every part of the pew. *Garnett* supplies quality craftsmanship in every construction detail.

PLAN YOUR PEW SPACING

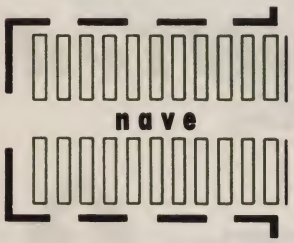

In sectarian churches, the pews should be spaced 34″ apart, from one pew back to the next pew back. In liturgical churches, where the faithful kneel for prayers, the spacing may be increased to 36″, and in this case, kneelers should be planned as a part of the pew. *For convenience in planning and laying out pew arrangements, Garnett can supply you with a special pew spacing scale upon request.*

THE PEW SCREEN

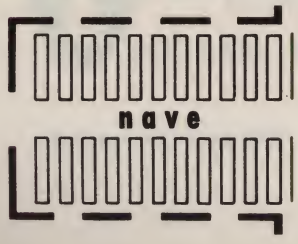

A pew screen (sometimes called a pew front) should be located in front of the first row of pews, its center 36″ to 42″ forward of the first pew back, its height equal to the height of the pew backs. Garnett pew screens are custom-crafted to match your pews in quality and styling.

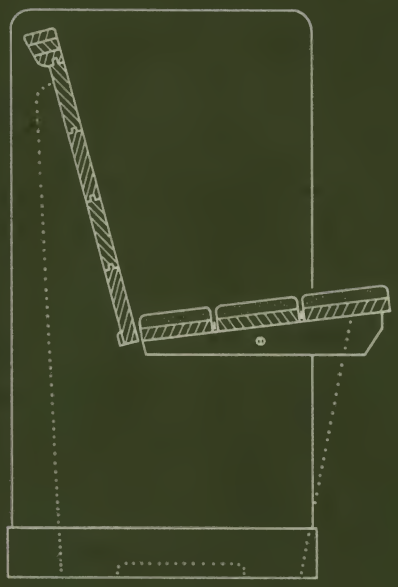

Pew Body No. 58

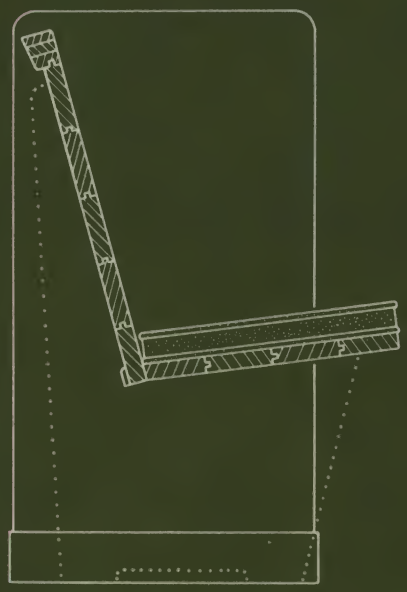

Pew Body No. 605

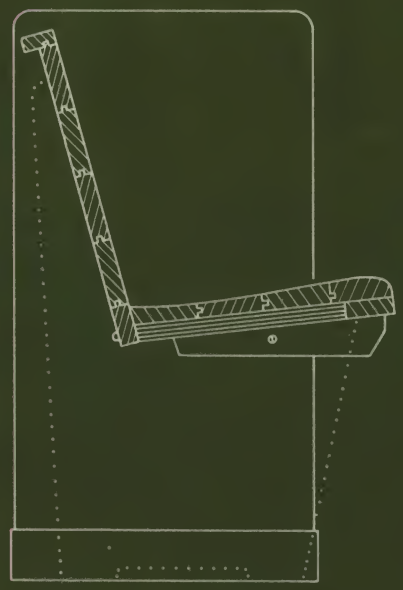

Pew Body No. 30

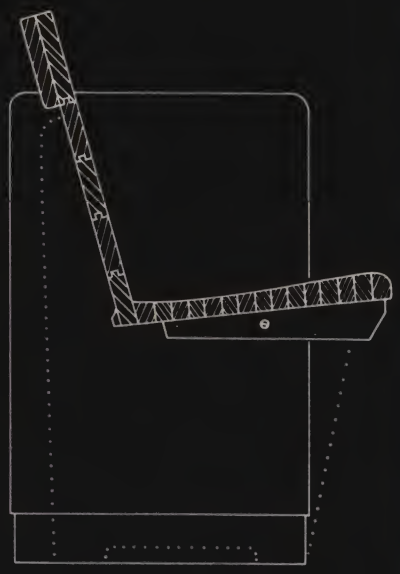

Pew Body No 40

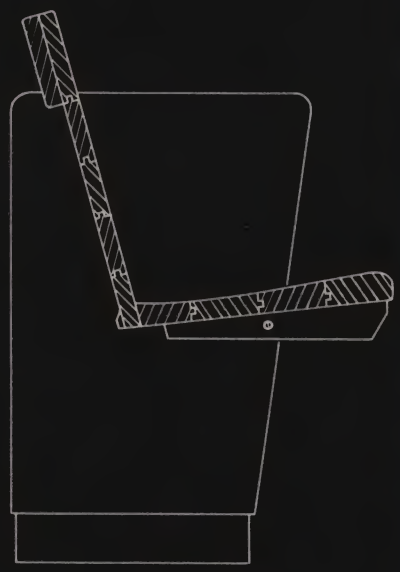

Pew Body No. 590

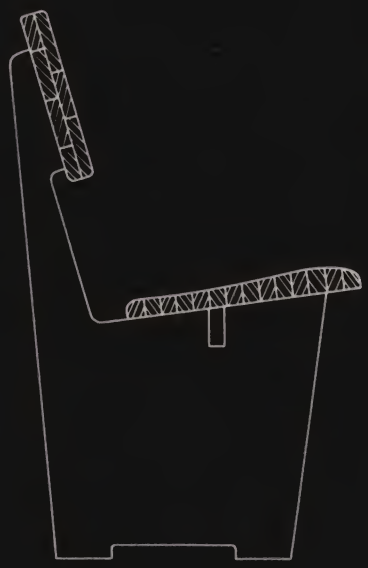

Pew Body No. 591

CREATE YOUR OWN PEW BODY

Let your theme determine the styling of a pew body best suited to your needs. Whatever that styling, Garnett can supply it. For example, the illustrations show a few of the most popular types, including pew bodies with strip seats or flat grain seats, and those with wide or narrow cap rails. The dimensions for these pew bodies were based on ideals of practicality and comfort, with the backs usually 32″-33″ from the floor to the top of the cap rail, and pitched from 4½″ to 5½″. The seats have a depth of 15″, rising 17″ from the floor to the front nose of the seat.

UNIQUE METHOD OF SUPPORT

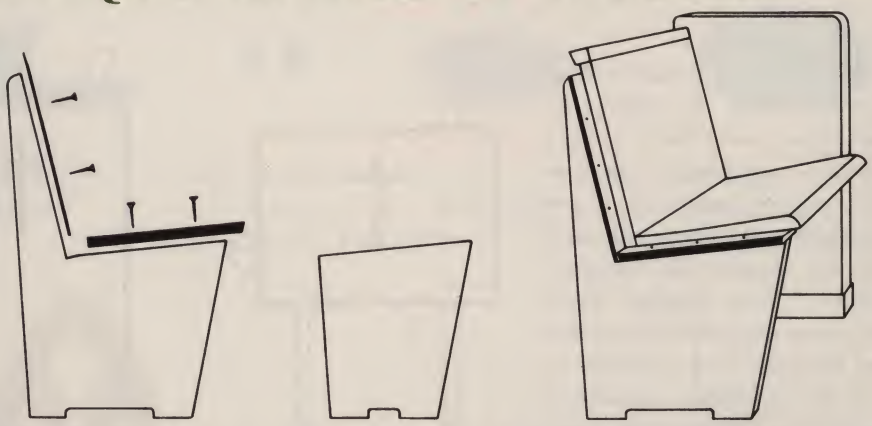

Pews up to 14′ long are constructed without divisions. Longer pews, if necessary in your plans, have additional support in Garnett's unique blind division method, with sturdy cleats blind-screwed into seat and back — a simple, yet absolutely rigid construction allowing clear seating throughout the length of the pew.

Trinity Presbyterian Church, Topeka, Kansas, Brown & Slemmons, Architects, Topeka, Kansas

The quoted price on Garnett Church Furniture includes transportation and installation charges. Pews will be delivered in Garnett's own trucks and installed by Garnett's trained personnel.

ADD PEW ENDS OF YOUR OWN DESIGN

Design your pew ends to carry out the desired effect, assured that Garnett can translate your creation into the finest of furniture. As the sample illustrations indicate, we are experienced with all types of pew ends, from the best of the traditional to the newest of the contemporary — including styles utilizing the beauty of modern metals. Whatever style you specify, you can be sure of enduring craftsmanship, in 2¼″ three-ply ends framed from ¾″ solid pieces, with the center pieces frame-crossbanded to insure against warpage. The ends will be routed with a dovetail bit to fit tightly to the pew body. The cap rail of the pew body will be routed into the ends for maximum back support. Plying of the ends will be accomplished with Urea-Resin glues, insuring great strength and enduring beauty, free from the darkening often encountered as inferior glues age.

Indicative of the unusual effects possible when combining the beauty of wood with modern metals — aluminum, stainless steel and wrought iron — are these pew end designs by Robert Bessier, Designs for Industry, Prairie Village, Kansas. These and other contemporary models are available from Garnett, as well as consultation services to help you in designing your own Wood With Metal pew ends.

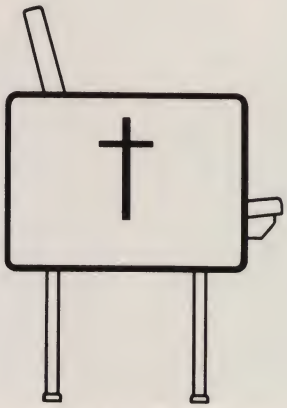

Pew End No. 5901

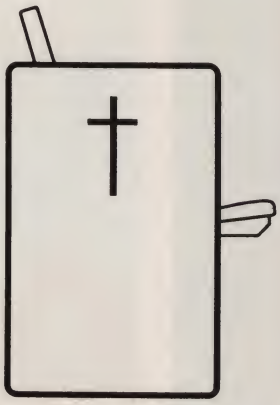

Pew End No. 5906

Pew End No. 9548

Pew End No. 7941

Pew End No. 48-2

Pew End No. 58

ADD YOUR OWN INDIVIDUAL TOUCHES

In specifying Garnett, you are free to individualize your pews with your choice of cap mouldings, edge mouldings, panel carvings and bas relief details. The panel motifs illustrated are only a few of the many you might consider. *For your convenience, Garnett maintains a complete file of symbols appropriate to every denomination. We welcome the opportunity to help you select exactly the right symbolic elements for all your church furnishings.*

Panel No. 7

Panel No. 660

Panel No. 650

Panel No. 640

Panel No. 630

Panel No. 635

Panel No. 645

GARNETT ACCESSORIES FOR YOUR PEWS

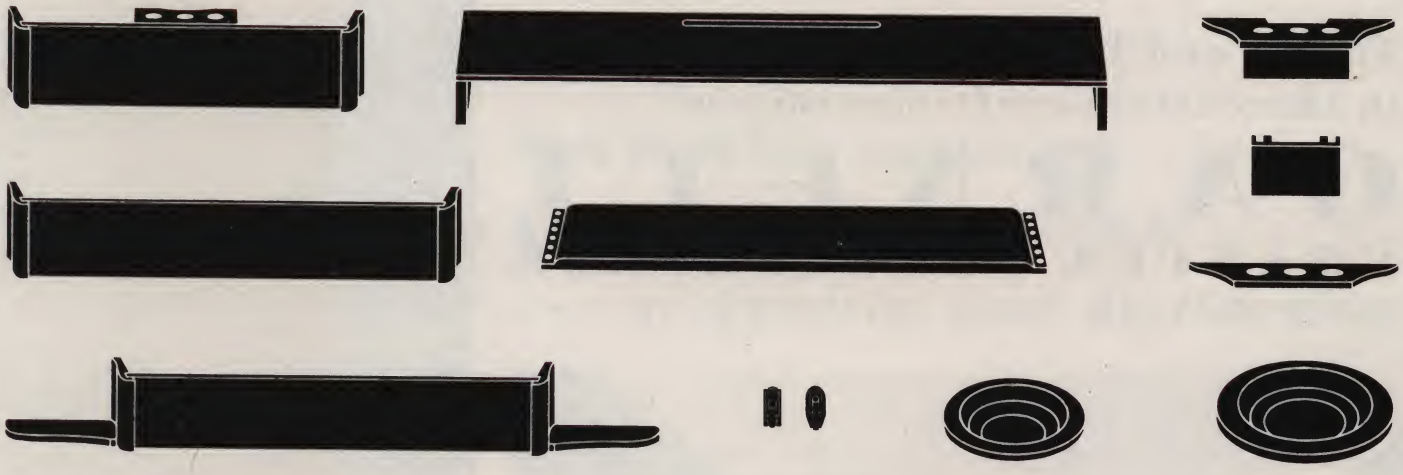

All traditional pew accessories are available from Garnett, or Garnett will manufacture to your specifications.

- BOOKRACKS
- COMMUNION CUP HOLDERS
- ENVELOPE HOLDERS
- HAT HOLDERS
- KNEELER PADS
- COLLECTION PLATES

GARNETT

finest construction throughout

Although frequently copied in styling, Garnett Church Furniture cannot be surpassed for quality of workmanship and materials. Garnett uses highland-grown Appalachian Red Oak, a superior wood which grows slowly during cool mountain summers to form a finer grained, finer textured product, free from checks and mineral streaks. The lumber is air-dried for six months prior to being custom-kilned in Garnett's own kilns. The moisture content is carefully regulated for the area in which the furniture will be used. Where other companies might be content with the standard U. S. Forest Products recommendation of 7% moisture content, Garnett takes special care to reduce moisture to as little as 1% for furniture to be used in arid areas, and tailors the moisture content at 13% to 15% for higher humidity areas.

Grain patterns are matched as the wood is joined. Only best quality sun bronze screws are used, and except when attaching accessories to pews, the screw heads are plugged with oak. All glued joints are surfaced on Garnett's Glue-jointer so that the pieces snap into place for perfect bonding. Animal glue (the most invisible bonding agent) is used on all surface joints. Where animal glue is used, the material is heated to approximately 100° F. and the joints are allowed to stand at least 48 hours before surfacing. All plying (as on pew ends) is accomplished with Urea-Resin glues, finest for strength, durability and moisture resistance.

Throughout the production of any piece of Garnett Church Furniture, only the best genuine cabinet construction methods are employed — methods far surpassing millwork.

There are no standard finishes on Garnett furniture. After each piece is hand sanded and scraped, it is sealed and finished with Garnett's especially compounded finishes, scientifically applied to bring out the greatest beauty of the wood.

in the sanctuary...

Theme and function combine superbly in the custom-craftsmanship of...

GARNETT
CHANCEL FURNISHINGS

Park Avenue Christian Church, Des Moines, Iowa
Wetherell & Harrison, Architects, Des Moines, Iowa

St. John's Methodist Church, Kansas City, Missouri, Harry L. Wagner, Architect, Kansas City, Missouri

St. Thomas Episcopal Church, Hollywood, California
Harold H. Martin, Architect, Pasadena, California

Messiah Lutheran Church, Independence, Missouri
Fullerton & McCamis, Architects, Kansas City, Missouri

The chancel, whether it is of the divided type or of the center pulpit type, sets the theme for your treatment of the entire church. You may look to Garnett for the most faithful and accurate development of your theme through custom produced chancel furnishings.

The divided chancel and the center pulpit require different groupings of the furnishings; and there are, of course, variations among the denominations as to placement of the individual pieces. Having furnished more than ten thousand churches of all faiths, Garnett is fully experienced with all these variations, and can give you completely integrated service in designing your chancel and its fitments.

Examples illustrated are of churches for which Garnett has supplied complete chancel groupings.

Leeds Baptist Church, Kansas City, Missouri
Everitt-Bleistein-Associates, Architects & Engineers, Kansas City, Missouri

MATCHED GROUPS
INDIVIDUAL PIECES
. . . of quality and distinction

Altars
Alms Boxes
Baptismal Fonts
Bible Boxes
Canopies
Christian Science Readers' Desk
Clergy Seats
Coat and Hat Racks
Communion Chairs
Communion Tables
Communion Rails
Confessionals
Credence Shelves
Ewer Shelves
Flower Stands
Gradines
Hymn Boards
Lecterns
Litany Desks
Organ Grilles
Panelling
Prie Dellas
Prie Dieux
Pulpits
Pulpit Chairs
Reredoses
Retables
Sedilias
Tabernacles
Vestment Cases

In addition to complete chancel groups, Garnett offers custom-designed fitments in the enduring beauty of solid oak construction, with ornamentation and symbols either carved from solid oak or executed in gleaming metals.

Other woods are also available, in the same high quality construction, if specified.

Chairs may be upholstered in velvet or best quality heavy weight plastic, if desired.

Feel free to contact Garnett for any information you may require. We will be happy to supply shop drawings and/or detail drawings for inclusion in your church plans.

Our Savior Lutheran Church, Greeley, Colorado, Donald R. Hollis, Architect, Overland Park, Kansas

GARNETT CHURCH FURNITURE IS COMPETITIVELY PRICED

Garnett welcomes the opportunity to submit quotations on church furniture and accessories designed to your specifications. You will find no better quality at any price. Note, too, that the quoted price includes all installation and transportation costs.

SPECIFICATIONS

We welcome the opportunity to work with you in detailing complete specifications for chancel furniture, panelling, pews and accessories as custom-designed for your church.

GARNETT'S PLEDGE TO YOU

For three generations, Garnett has produced church furniture of the highest quality in materials and workmanship. We are proud of our products and we offer them with our guarantee of complete satisfaction. On all orders, large or small, you will receive first class cabinet work with high quality finishing. Garnett guarantees to replace, at any time, any work that proves unsatisfactory on account of faulty materials or workmanship.

Garnett is large enough to fill your orders promptly; not too large to give friendly personal attention to your church furnishing problems. If there is any way we can serve you, contact the Garnett, Kansas, office or your nearest Garnett distributor:

SALES REPRESENTATIVES:

D. A. Rickabaugh
330 Cucharras
Colorado Springs, Colo.

George E. Vaughan
5820 E. 15th Terrace
Kansas City, Mo.
Phone — Chestnut 1-8109

Lowery-McDonnell Co.
4644 North Western Ave.
Chicago 25, Ill.

C. E. Beck
503 Grant St.
Iowa City, Ia.

Ed and Eileen Holmquist
21 Marvin Ave.
Akron 2, Ohio

W. G. Smith Company
803 Heights Blvd.—P.O. Box 7462
Houston 8, Texas

Russell W. Landis
926 East 64th St.
Tacoma, Washington

quality furniture . . .
personal service . . .

GARNETT

CHURCH FURNITURE & MANUFACTURING CO.
GARNETT • KANSAS

manufacturers and designers of church furniture since 1879

Digitized by:

ASSOCIATION
FOR
PRESERVATION
TECHNOLOGY,
INTERNATIONAL
www.apti.org

BUILDING
TECHNOLOGY
HERITAGE
LIBRARY

https://archive.org/details/buildingtechnologyheritagelibrary

From the collection of:

Carol J. Dyson, AIA